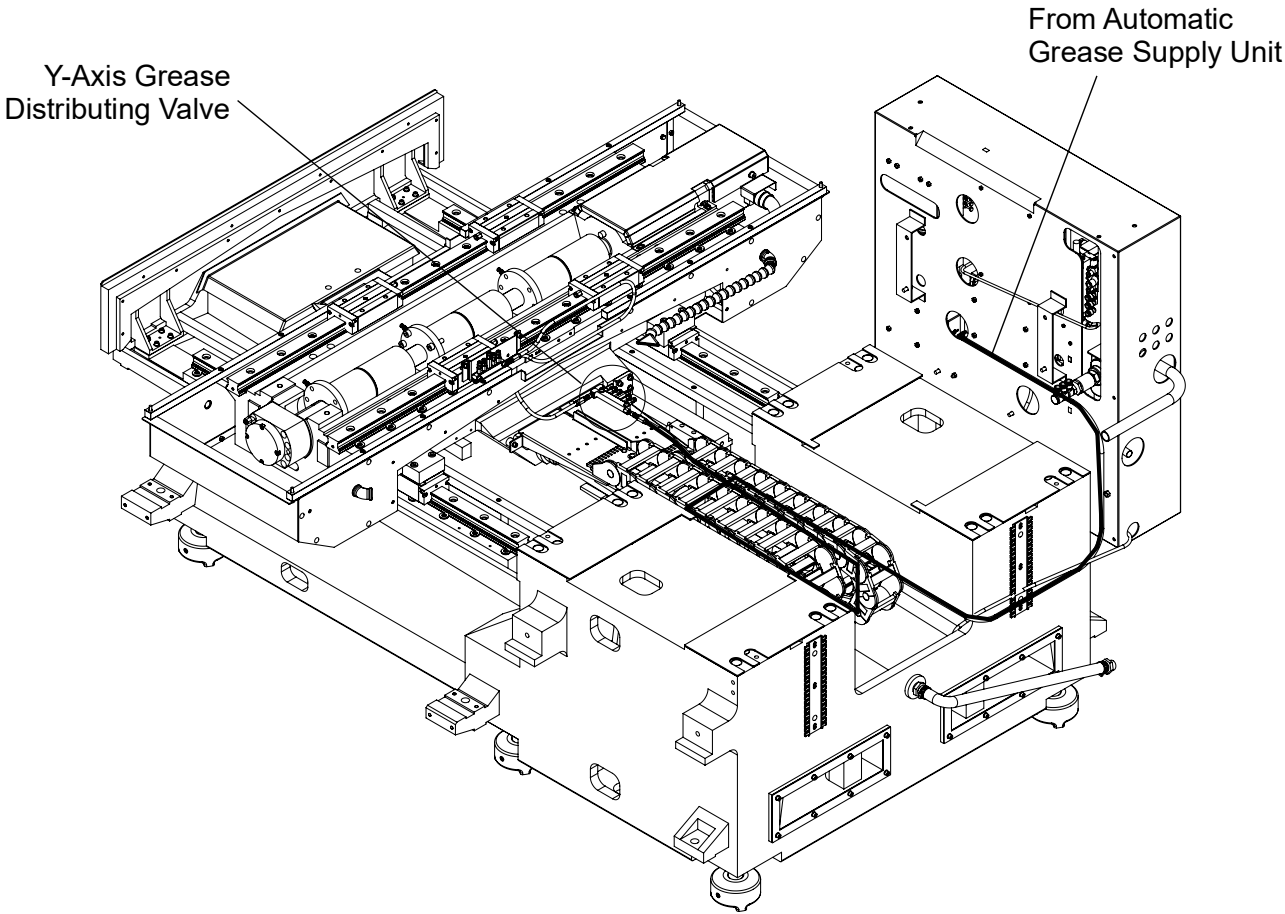Y-Axis Grease Piping Route